[This Drawing is a reproduction of the Original on a reduced scale.]

Fig.1.

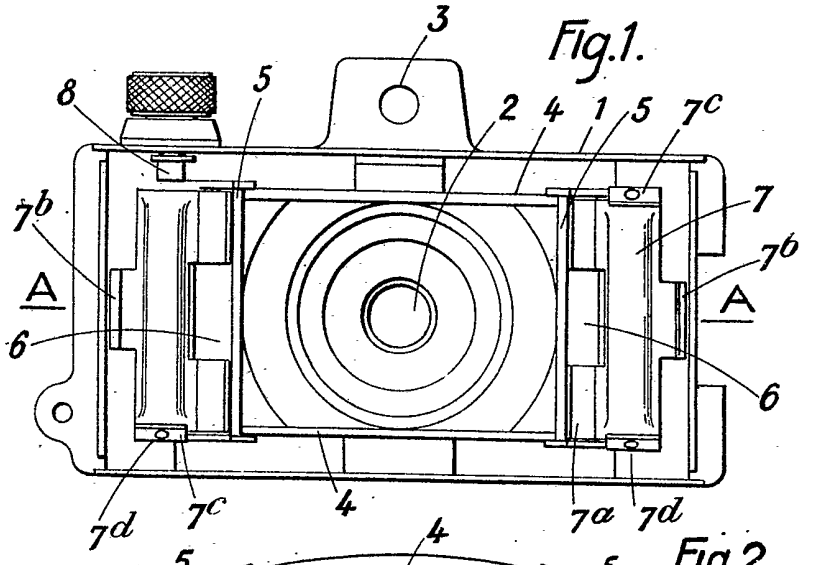

Fig.2.

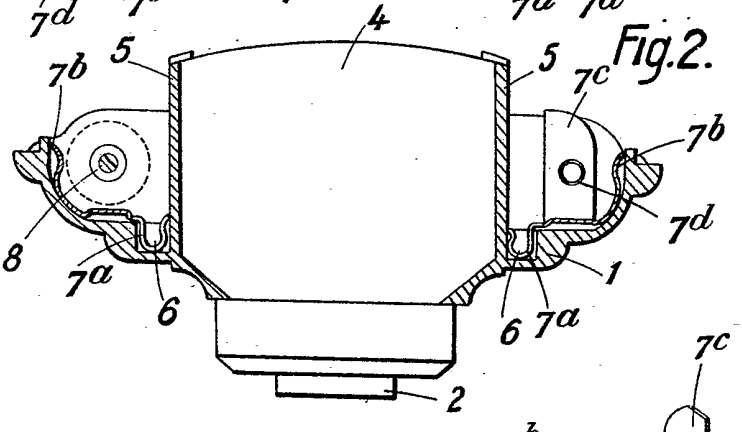

Fig.3.

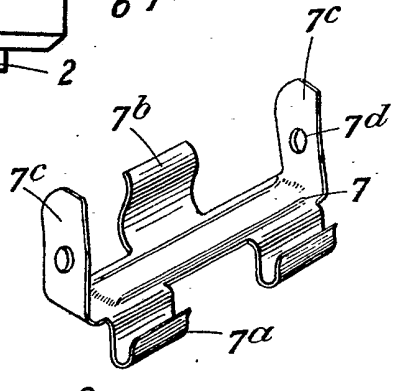

Fig.4.

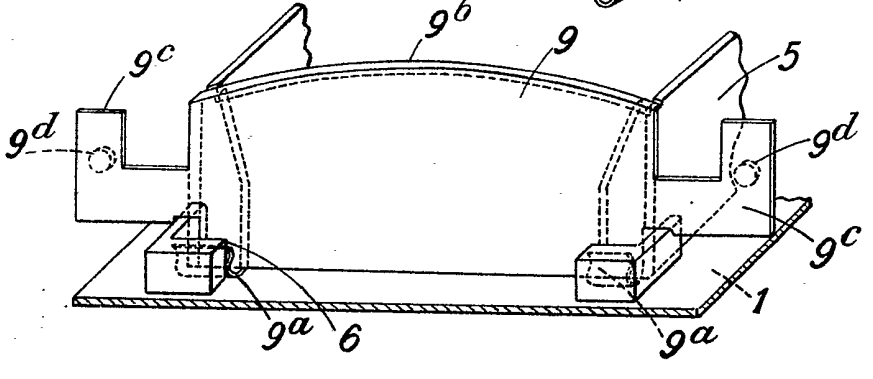

Malby & Sons, Photo-Lith.